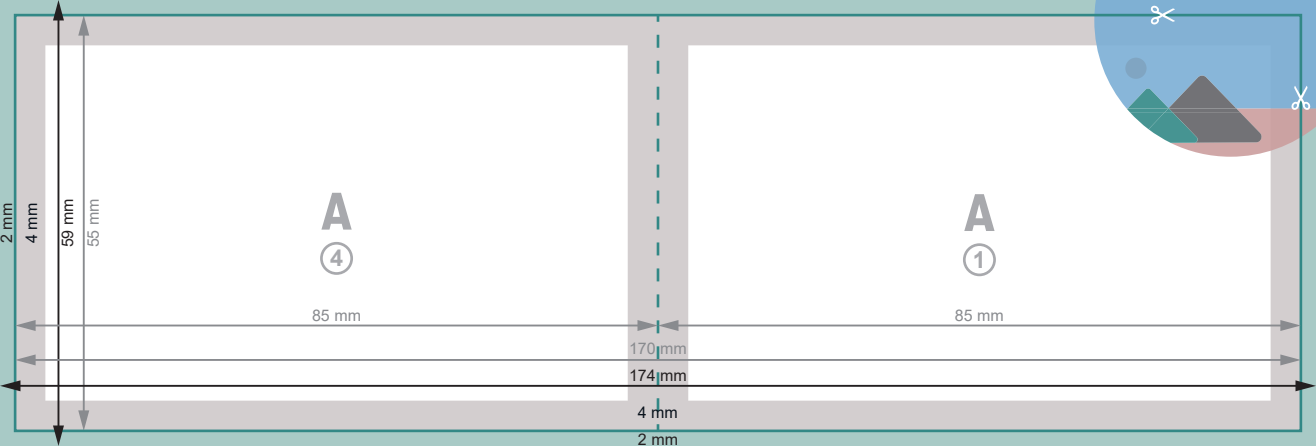
2 mm
4 mm
59 mm
55 mm
A
4
85 mm
A
1
85 mm
170 mm
174 mm
4 mm
2 mm

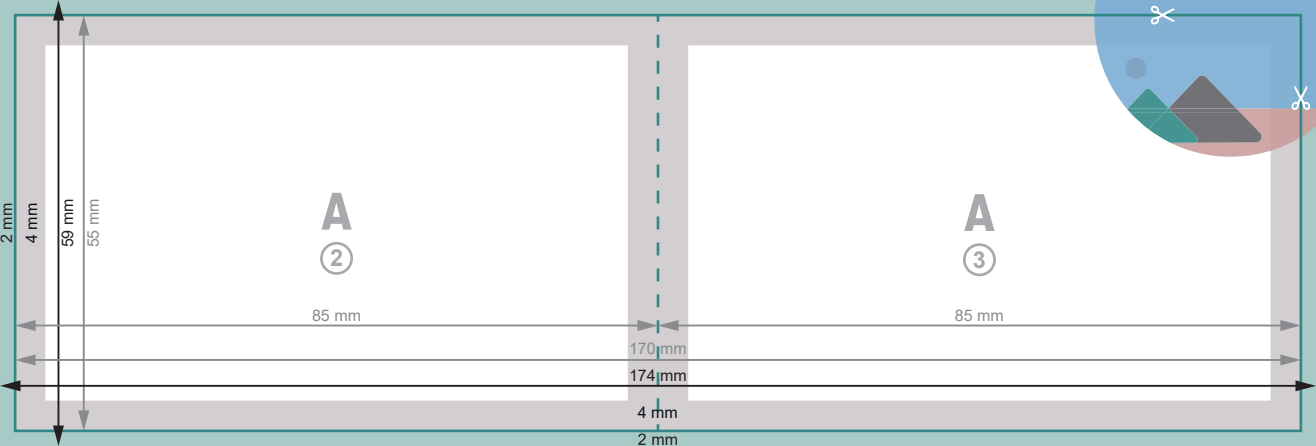
2 mm
4 mm
59 mm
55 mm
A
2
A
3
85 mm
85 mm
170 mm
174 mm
4 mm
2 mm